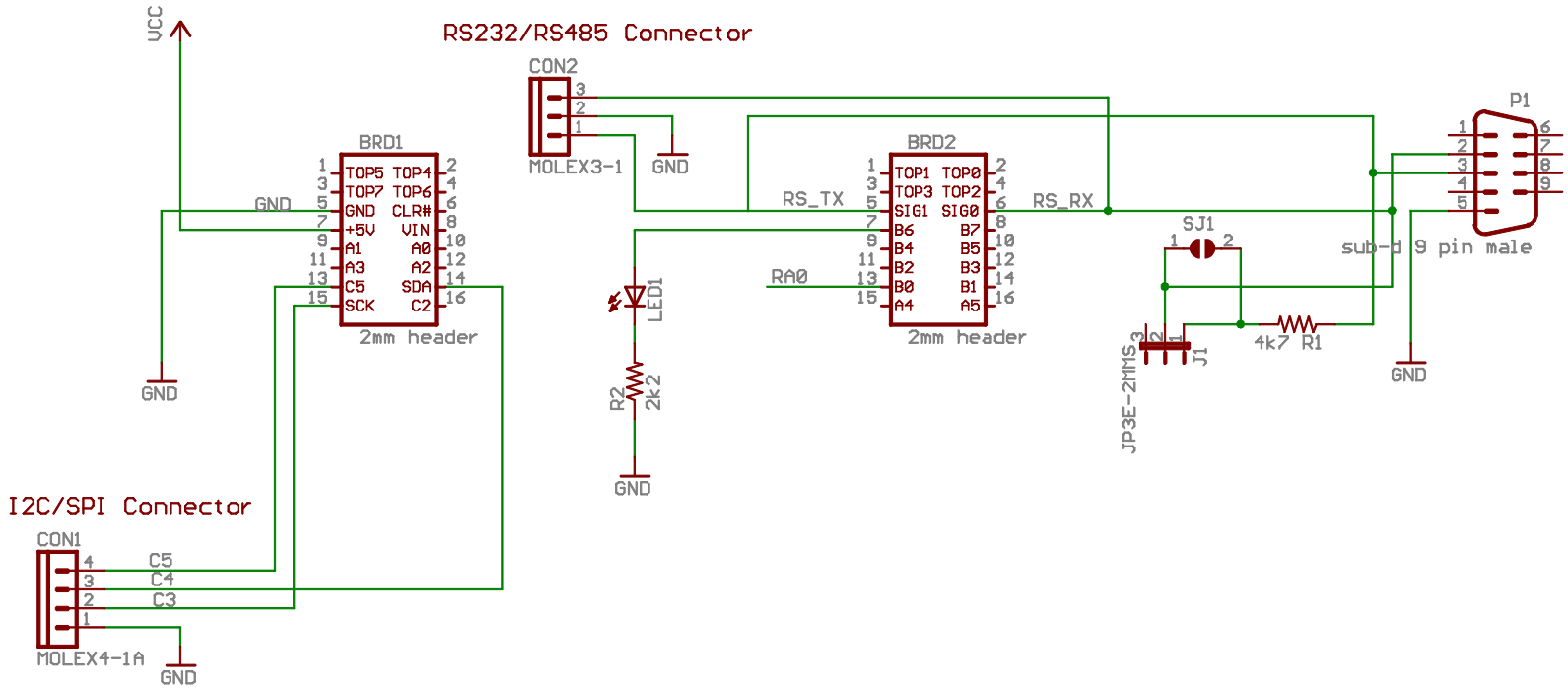

SER2S - Modtronix Engineering

TITLE: ser2sr1

Document Number:

REV:

Date: 3/17/2004 05:19:26p

Sheet: 1/1