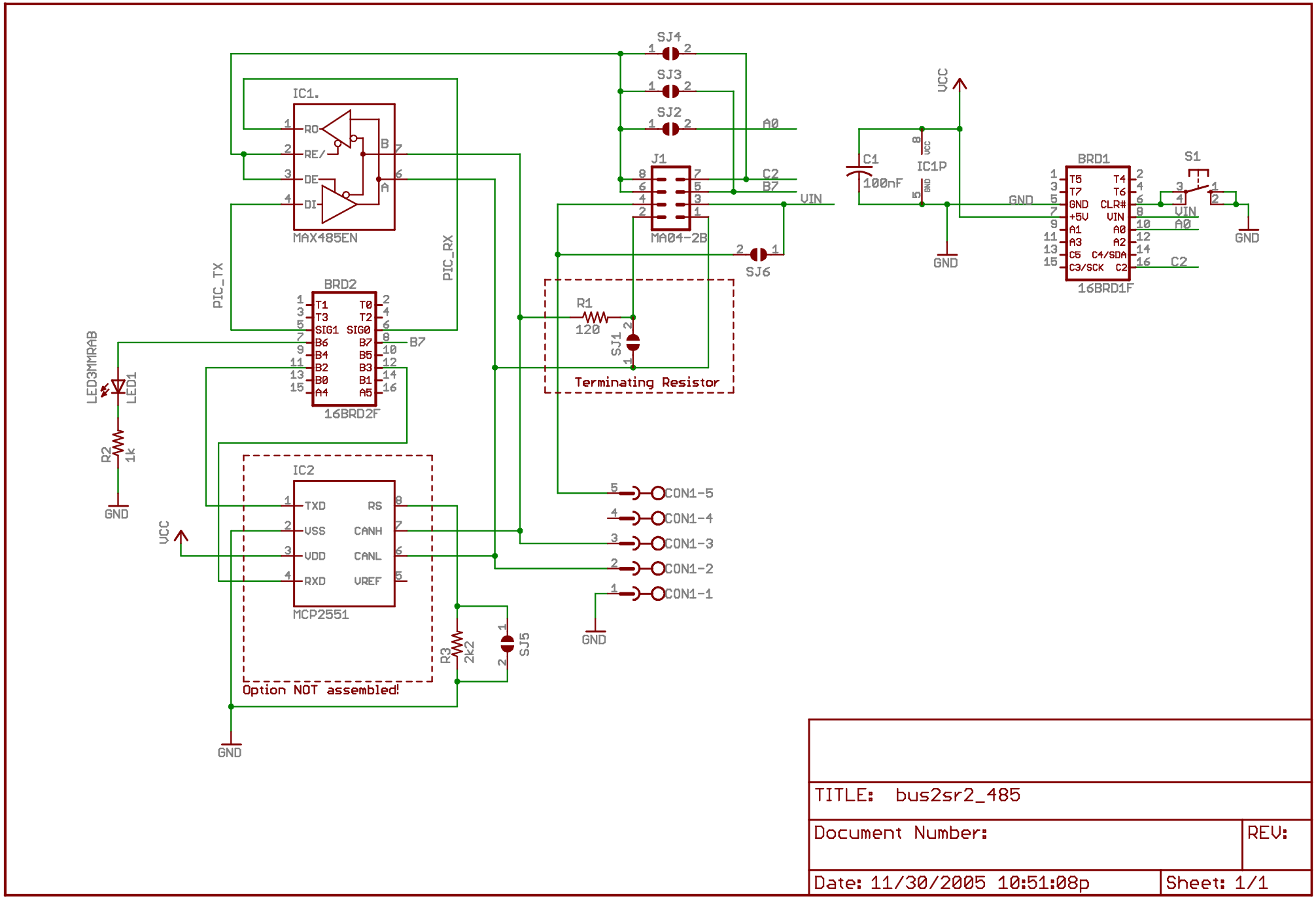

TITLE: bus2sr2_485

Document Number:

REV:

Date: 11/30/2005 10:51:08p

Sheet: 1/1

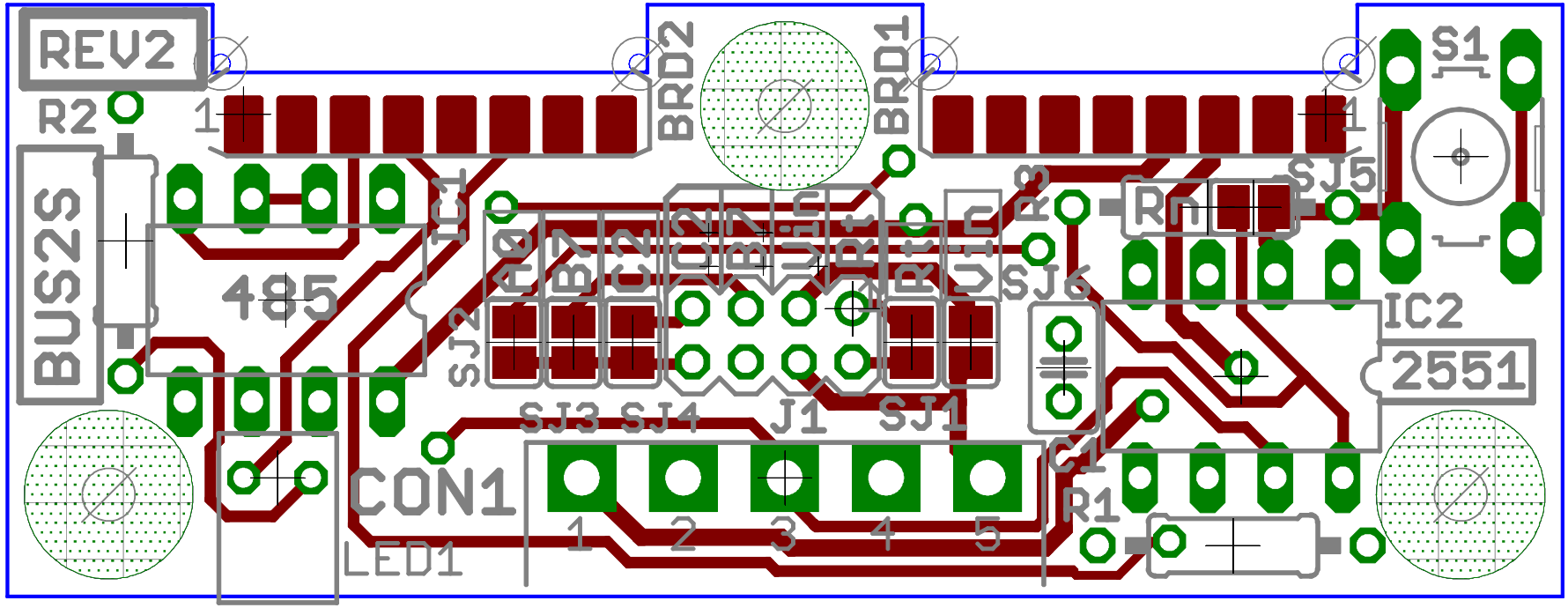
REV2
R2
BUS2S
485
IC1
BRD2
BRD1
S1
SJ5
R
SJ6
IC2
2551
SJ2
A0
B7
C2
D2
B2
SJ6
R6
R5
D6
SJ3
SJ4
J1
SJ1
C1
R1
CON1
1
2
3
4
5
LED1

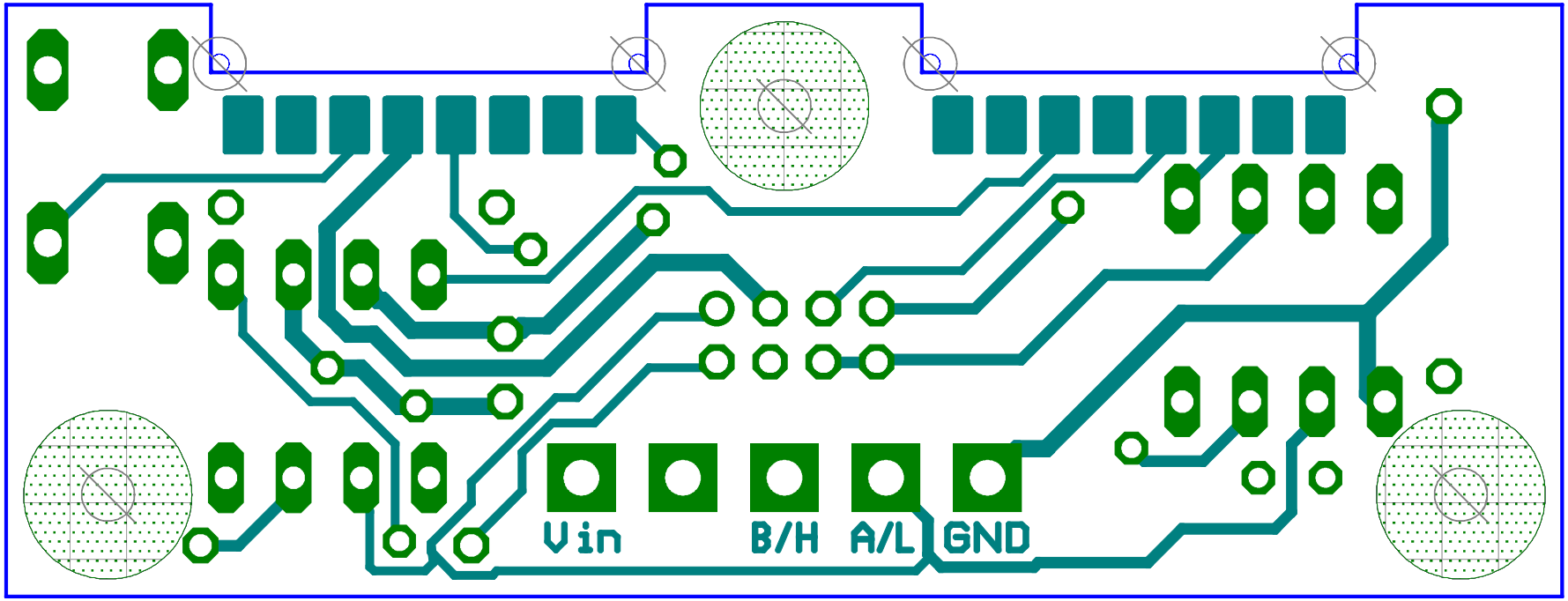
Vin
B/H
A/L
GND