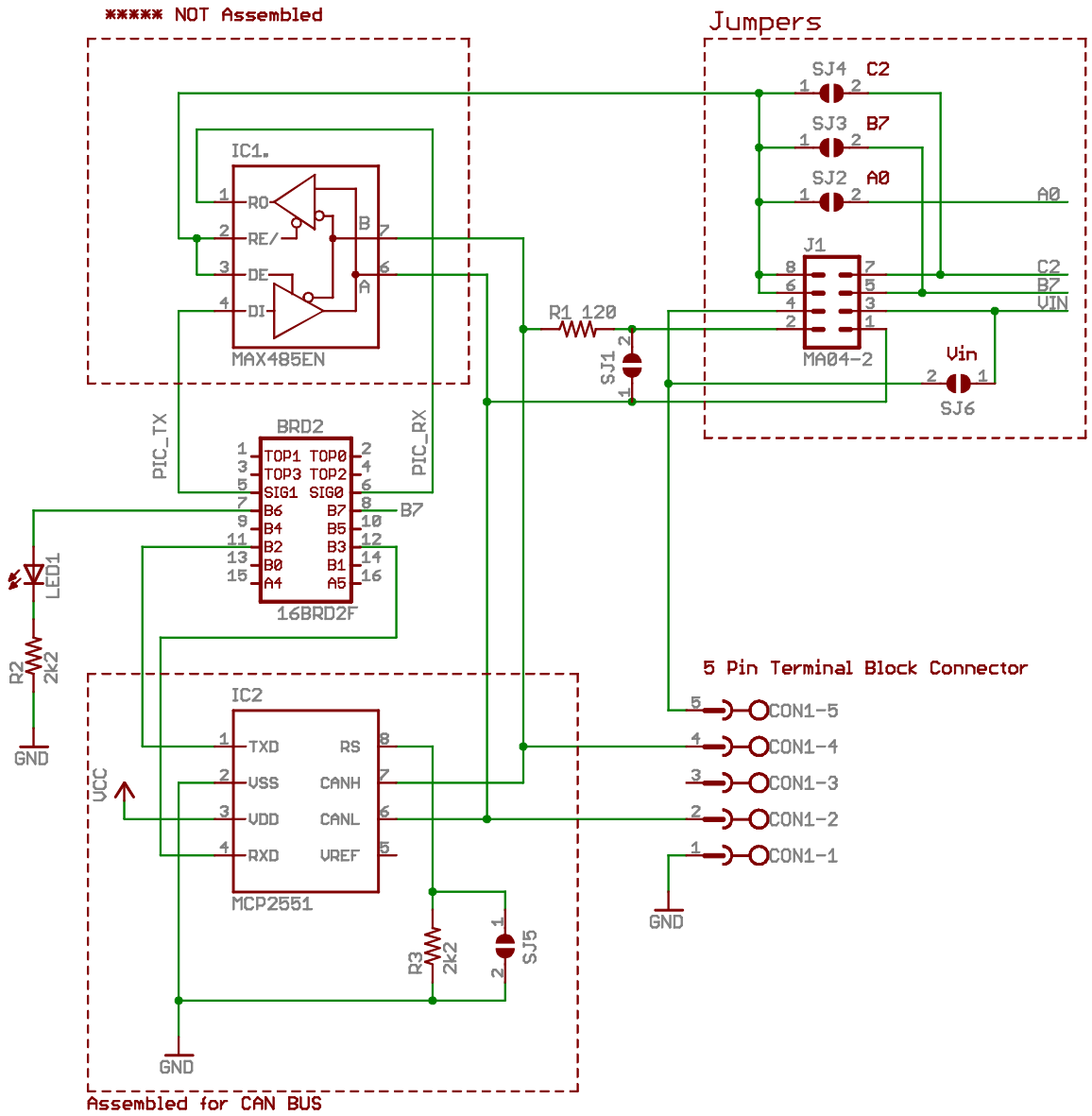

Jumper Truth Table

Position	Description
7-8	***** NOT used!
5-6	***** NOT used!
3-4	When set, pin 5 on the terminal block can be used to supply this board with power (7-35V).
1-2	When set, a 120 ohm terminating resistor is added to the bus. This can be used for RS485 or CAN BUS.

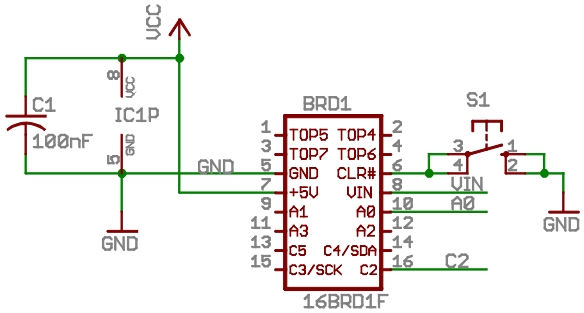

BUS2S - Modtronix Engineering

TITLE: bus2sr1_can

Document Number:

REV:

Date: 3/10/2005 11:43:07a

Sheet: 1/1